KYOCERA

FS-1018MFP
KM-1815

PARTS LIST

Published in Apr.'04
842DD120

NOTE

1.Indicate parts number and machine model when placing an order.

eg.	Parts Number	Parts Name	Machine Model	Cycle	Quantity
	2DD04020	LID TOP	FS-1018MFP/KM-1815	50Hz	1

2.Service calls and freight will be charged separately.

3.Symbols in the "Parts Number" column.

- Parts with "◉" indicates the spare parts and the parts without "◉" can not be supplied.

- Parts with "•" are component parts or sub-assemblies of the assembly appearing immediately above them.

eg.	Parts Number	Parts Name	Parts Number	Parts Name
	2DC93102	PARTS,MPF COVER SP	•2A806730	TRAY MPF A
			•2A806740	TRAY MPF B

4.See the last page of this parts list for the classification of the screws in the illustrations.

CONTENTS

FIG.1	EXTERIOR COVERS	2
FIG.2	FRAMES & PAPER FEED SECTION I	4
FIG.3	PAPER FEED SECTION II & LSU	8
FIG.4	DRIVING SECTION	10
FIG.5	PROCESS UNIT	12
FIG.6	FUSER UNIT	14
FIG.7	CASSETTE	16
FIG.8	OPTICAL SECTION	18
FIG.9	OPERATION UNIT & ORIGINAL HOLDER	20
FIG.10	TOOLS & SUPPLIED PARTS	22
	• INDEX	24

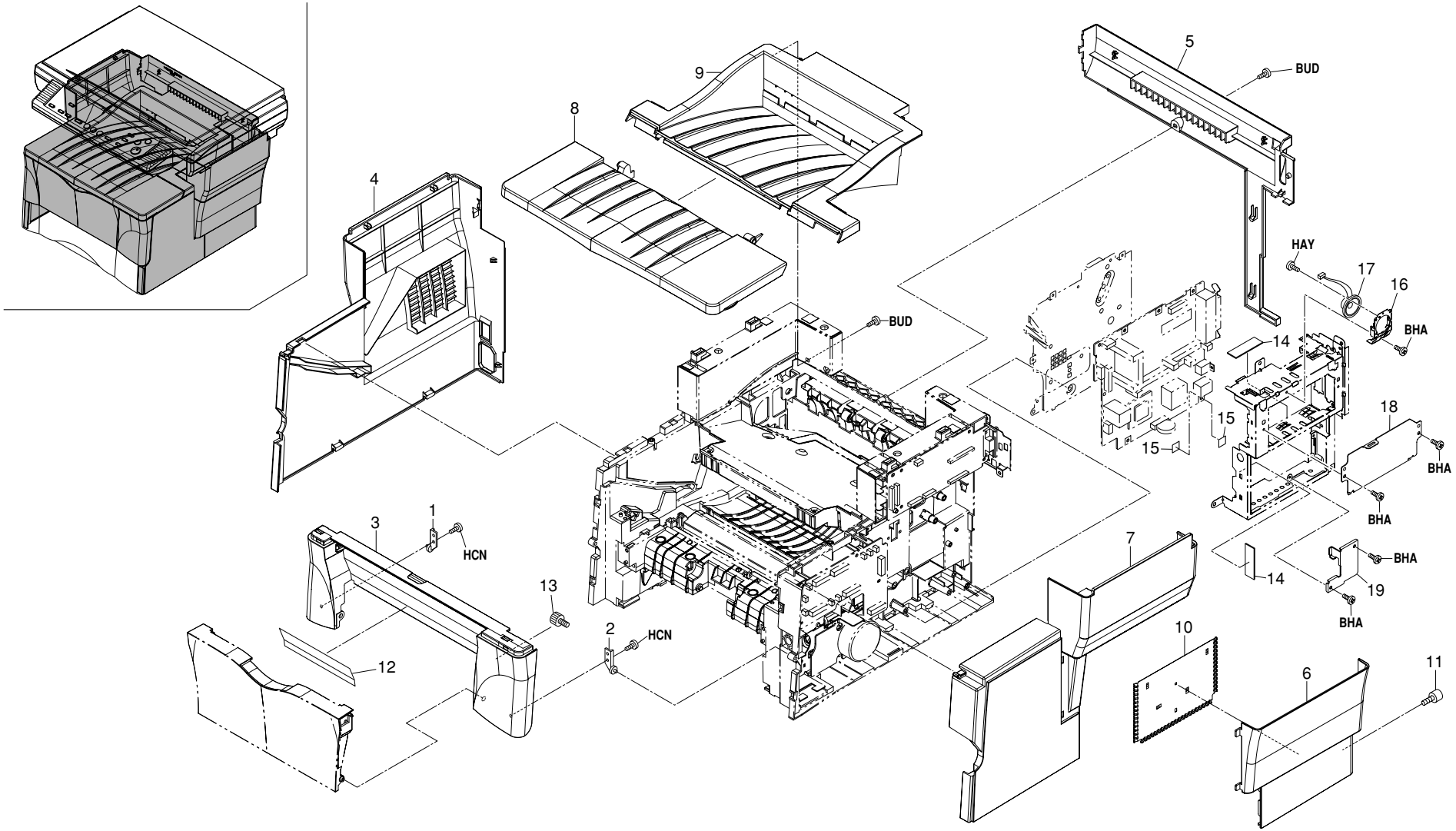
1
2
3
4
5
6
7
8
9
10
11
12
13
14
15
16
17
18
19
HCN
HCN
BUD
BUD
HAY
BHA
BHA
BHA
BHA
BHA

FIG. 1 EXTERIOR COVERS

SP	Ref. No.	Part. No.	Alternative.	Description	Quantity		
					120V	230V	240V
	1	2A804080	5MVX422DN005	HINGE FRONT L	1	1	1
	2	2A804090	5MVX422DN006	HINGE FRONT R	1	1	1
◉	3	2DD04010		COVER FRONT U (KM-1815)	1		1
◉	3	2DD04040		COVER FRONT E (FS-1018MFP)		1	
◉	4	2DC04020		COVER LEFT (1/2)	1	1	1
	5	2DC04030		COVER REAR	1	1	1
◉	6	2DC04050		COVER DIMM	1	1	1
◉	7	2DC04060		COVER RIGHT (1/2)	1	1	1
◉	8	2DD04020		LID TOP	1	1	1
◉	9	2DC04080		COVER TOP (1/3)	1	1	1
	10	2DC04090		PLATE SHIELD	1	1	1
	11	2A802520	5MMT263SN012	SCREW OP	1	1	1
	12	2DC05070		LABEL FRONT COVER	1	1	1
	13	19512210		RETAINING PIN,MIRROR FRAME	1	1	1
	14	2DD27160		SHEET EMI	2	2	2
	15	2DD26100		SHEET MAIN PCB	2	2	2
	16	2DD26040		HOLDER SPEAKER	1	1	1
	17	3DB27160		SPEAKER(PBF)	1	1	1
	18	2DD26020		LID CONTROLLER L	1	1	1
	19	2DD26080		MOUNT SARCON MAIN	1	1	1

• Parts with "•" are component parts or sub-assemblies of the assembly appearing immediately above them.
• Parts with "◉" indicates the spare parts.

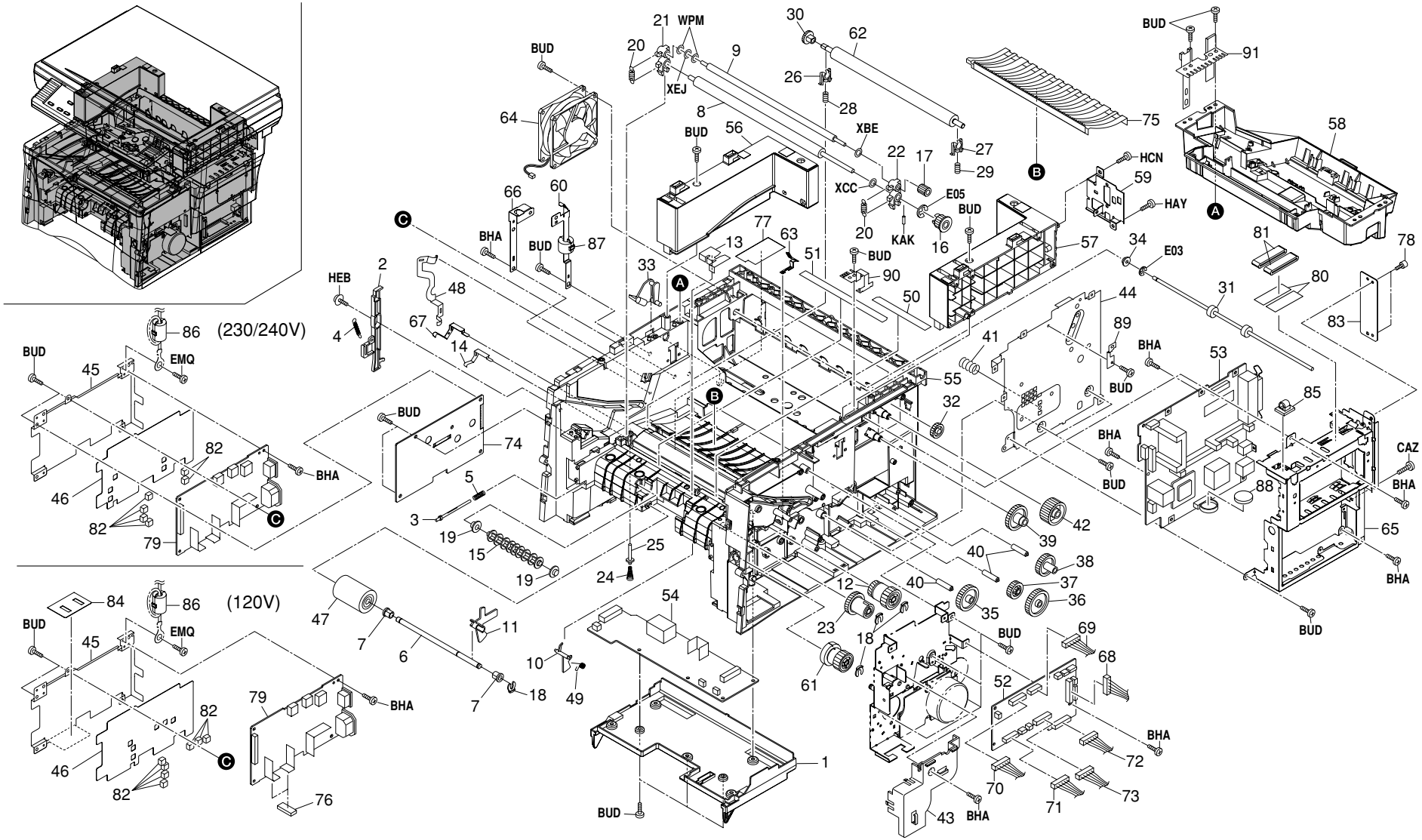
(230/240V)
(120V)
BUD
BHA
HEB
EMQ
WPM
XEJ
XBE
XCC
KAK
E05
E03
HCN
HAY
CAZ

FIG. 2 FRAMES & PAPER FEED SECTION I

2DD

SP	Ref. No.	Part. No.	Alternative.	Description	Quantity		
					120V	230V	240V
	1	2A802030	5MVB874CH002	COVER PWB	1	1	1
	2	2A802040	5MVX721DN001	LEVER INTERLOCK	1	1	1
	3	2A802050	5MVT653DW001	PIN CASSETTE	1	1	1
	4	2A802060	5MMW351LD006	SPRING INTERLOCK	1	1	1
	5	2A802070	5MMW341LD005	SPRING PIN CASSETTE	1	1	1
	6	2A806020	5MMT766SN007	SHAFT FEED	1	1	1
	7	2A806030	5MVM176DN026	BUSH FEED	2	2	2
◉	8	2A806040	5MMT876SN073	ROLLER REGIST LOW	1	1	1
◉	9	2A806050	5MMT865SN010	ROLLER REGIST UP	1	1	1
◉	10	2A806090	5MVX432DB009	ACTUATOR REGIST	1	1	1
◉	11	2A806100	5MVX542DB003	ACTUATOR PE	1	1	1
◉	12	2A806120	5AAVCLTCH016	CLUTCH REGIST	1	1	1
	13	2A806170	5MVS441KF008	SHEET REGIST SW	1	1	1
	14	2A806210	5MMX532LD005	CONTACT EARTH REG	1	1	1
◉	15	2A806220	5MVT676DB002	PULLEY FEED	1	1	1
◉	16	2A806230	5MVG127DB047	GEAR REGIST Z20	1	1	1
◉	17	2A806240	5MVG126DB025	GEAR REGIST Z13	1	1	1
◉	18	2A806250	5MVX111DN003	RING STOPPER	4	4	4
	19	2A806260	5MVM161DW001	BUSH PULLEY FEED	2	2	2
	20	2A806410	5MMW261LD023	SPRING REGIST R	2	2	2
	21	2FM02620		BUSH REGIST L	1	1	1
	22	2FM02630		BUSH REGIST R	1	1	1
◉	23	2A806580	5AAVCLTCH017	CLUTCH MPF	1	1	1
	24	2A815010	5MMW361LD015	SPRING PIN BIAS	1	1	1
	25	2A815020	5MMT365SN003	PIN CONTACT BIAS	1	1	1
◉	26	2A816020	5MVX221DB023	BUSH TC L	1	1	1
◉	27	2A816030	5MVX221DW008	BUSH TC R	1	1	1
	28	2A816040	5MMW251LD043	SPRING TC L	1	1	1
	29	2DC16040		SPRING TC R	1	1	1
◉	30	2A816060	5MVG127DB048	GEAR TC Z18	1	1	1
◉	31	2A820090	5MMT874SN007	ROLLER EXIT UP	1	1	1
◉	32	2A820290	5MVG137DN030	GEAR EXIT Z23 UP	1	1	1
	33	2A820300	5MVX322SB020	ACTUATOR FUSER B	1	1	1
	34	2A821010	5MVM176DW001	BUSH EXIT	1	1	1
◉	35	2A822080	5MVG148DN045	GEAR Z38H	1	1	1
◉	36	2A822090	5MVG148DN046	GEAR FREE Z40H	1	1	1
◉	37	2A822100	5MVG138DN041	GEAR FREE Z25S	1	1	1
◉	38	2A822110	5MVG148DN047	GEAR Z34S	1	1	1
◉	39	2A822120	5MVG148DN048	GEAR Z40S	1	1	1
◉	40	2A822130	5MMT364SN003	PIN DRIVE	3	3	3
◉	41	2A822140	5MMW271LD010	SPRING FREE	1	1	1
◉	42	2A822160	5MVG148DN049	GEAR Z37S	1	1	1
	43	2A822200	5MVB663SB048	COVER CORD	1	1	1
	44	2A827010	5MMS775SL001	PLATE CONTROLLER	1	1	1
	45	2A827030	5MMX773SL001	PLATE SW REG		1	1
	45	2DD26090		PLATE SW REG	1		
	46	2DD28140		SHEET SW REG E		1	1
	46	2DD28150		SHEET SW REG J	1		
◉	47	2DC06030		ROLLER FEED ASSY	1	1	1
	48	2BY02010	5MMX632LD008	CONTACT MAIN MR	1	1	1
	49	2BY06040	5MMW261LD057	SPRING ACTUATOR REG	1	1	1
	50	2BY06050	5MVS622KF011	SHEET REGIST R	1	1	1
	51	2BY06060	5MVS622KF012	SHEET REGIST L	1	1	1
◉	52	2DD68040		P.W.BOARD ASSY ENGINE(SP)	1	1	1
◉	53	2DD68030		P.W.B ASSY MAIN US(SP)	1		
◉	53	2DD68110		P.W.B ASSY MAIN EU(SP)		1	
◉	53	2DD68120		P.W.B ASSY MAIN AS(SP)		1*	1*
◉	53	2DD68130		P.W.B ASSY MAIN AU(SP)			1
◉	54	2DD01060		P.W.BOARD ASSY BIAS	1	1	1
	55	2DC02010		FRAME BASE (1/8)	1	1	1
	56	2DC02020		STAY SCANNER LEFT	1	1	1
	57	2DC02030		STAY SCANNER RIGHT	1	1	1
	58	2DC02040		FRAME MIDDLE (1/3)	1	1	1
	59	2DC02050		MOUNT SCANNER PCB	1	1	1
	60	2DC02060		PLATE EARTH STAY L	1	1	1
◉	61	2DC06010		CLUTCH FEED	1	1	1
◉	62	2FM14070		ROLLER TRANSFER I	1		
◉	62	2FM14060		ROLLER TRANSFER C		1	1
	63	2DC16030		PLATE EARTH BRUSH A	1	1	1
◉	64	2DC23010		FAN COOLING	1	1	1
	65	2DD26010		SHIELD CONTROLLER (1/3)	1	1	1
	66	2DC26080		GROUND PLATE SR	1	1	1
	67	2DC26100		CONTACT TRANSFER	1	1	1
	68	2DC27010		CONN.CORD ASSY ENGINE-MAIN	1	1	1
	69	2DC27020		CONN.CORD ASSY ENGINE-SCANNER1	1	1	1
	70	2DC27030		CONN.CORD ASSY ENGINE-SCANNER2	1	1	1
	71	2DC27110		CONN.CORD ASSY ENGINE-MMOT	1	1	1
	72	2DD27020		CONN.CORD ASSY ENG-BIASH	1	1	1
	73	2DD27030		CONN.CORD ASSY ENG-BIASY	1	1	1
◉	74	2DD28070		TRANS ASSY	1	1	1

• Parts with "•" are component parts or sub-assemblies of the assembly appearing immediately above them.
• Parts with "◉" indicates the spare parts.

* Service Parts for Middle and Near East(Except SaudiArabia), Asia(Except Korea,Taiwan,Philippine and China) · · 220-240V

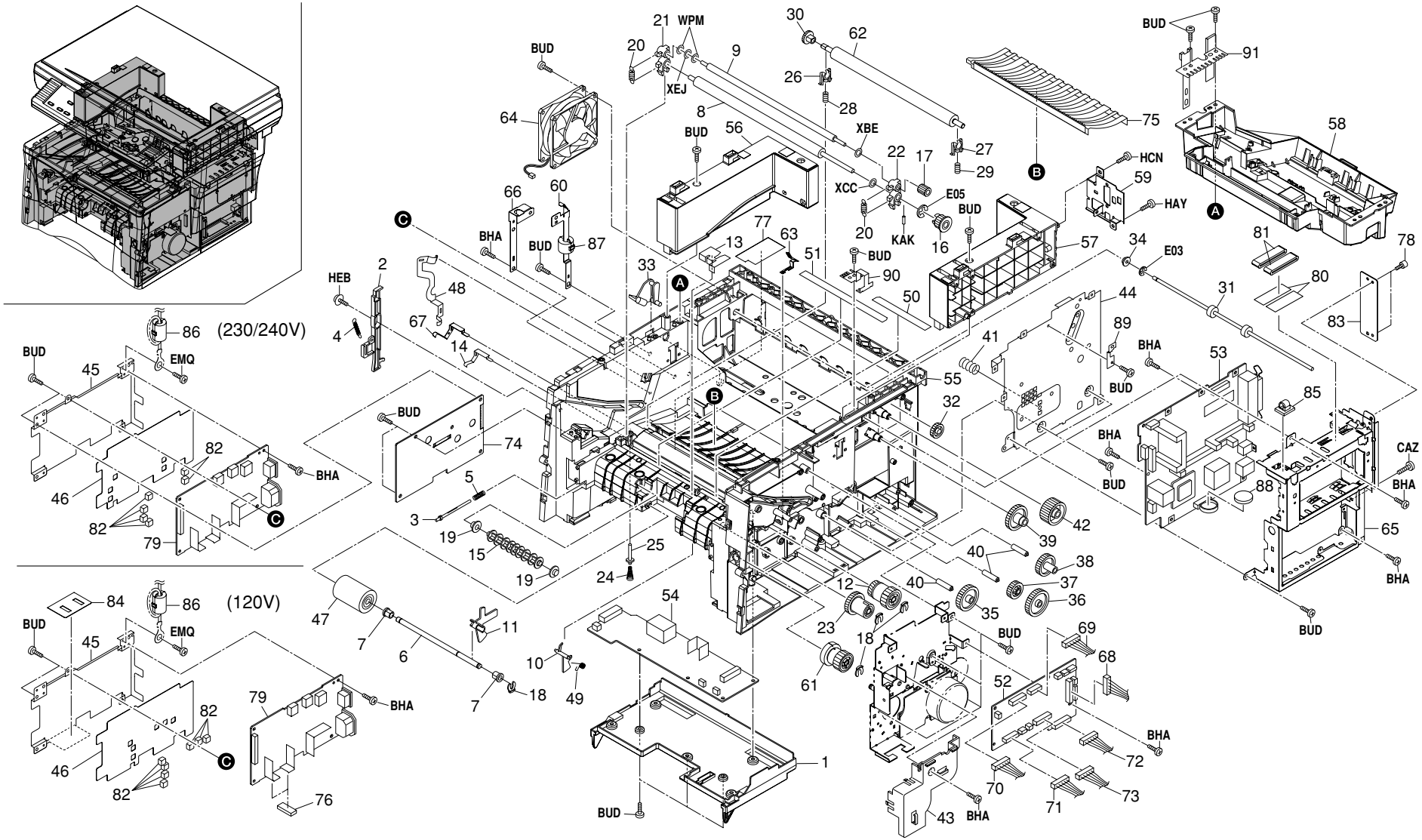
(230/240V)
(120V)
BUD
BHA
HEB
EMQ
WPM
XEJ
XBE
XCC
KAK
E05
E03
HCN
HAY
CAZ

FIG. 2 FRAMES & PAPER FEED SECTION I

SP	Ref. No.	Part. No.	Alternative.	Description	Quantity		
					120V	230V	240V
	75	2A868610	5AAY3010E+31	EARTH GUIDE ASSY	1	1	1
	76	2DD28100		SHEET RADIATOR A	2		
	77	2DC02100		FILM PS LOW	1	1	1
	78	2A802520	5MMT263SN012	SCREW OP	2	2	2
◉	79	2DD28030		PRINTED W.BOARD PS100	1		
◉	79	2DD28040		PRINTED W.BOARD PS200		1	1
	80	2DC26120		TAPE FFC M/S	2	2	2
	81	2DC27160		CORE FFC2	2	2	2
	82	2DD28120		SHEET RADIATOR C	7	6	6
	83	2DD26070		PLATE OPTION	1	1	1
	84	2DD28160		SHEET SW REG J SUB	1		
	85	M2105970		CLAMP,CKN-10(KITAGAWA)	1	1	1
	86	2BL27650		CORE 6-18X34	1	1	1
	87	2A627940		CORE 10-20X10	1	1	1
	88	Y87H5010		BATTERY,CR2032	1	1	1
	89	2DD02030		PLATE EARTH SHIELD	1	1	1
	90	2DD02010		PLATE EARTH CONTROLLER	1	1	1
	91	2DD02020		PLATE EARTH SW	1	1	1

• Parts with "•" are component parts or sub-assemblies of the assembly appearing immediately above them.
• Parts with "◉" indicates the spare parts.

FIG. 3 PAPER FEED SECTION II & LSU

2DD

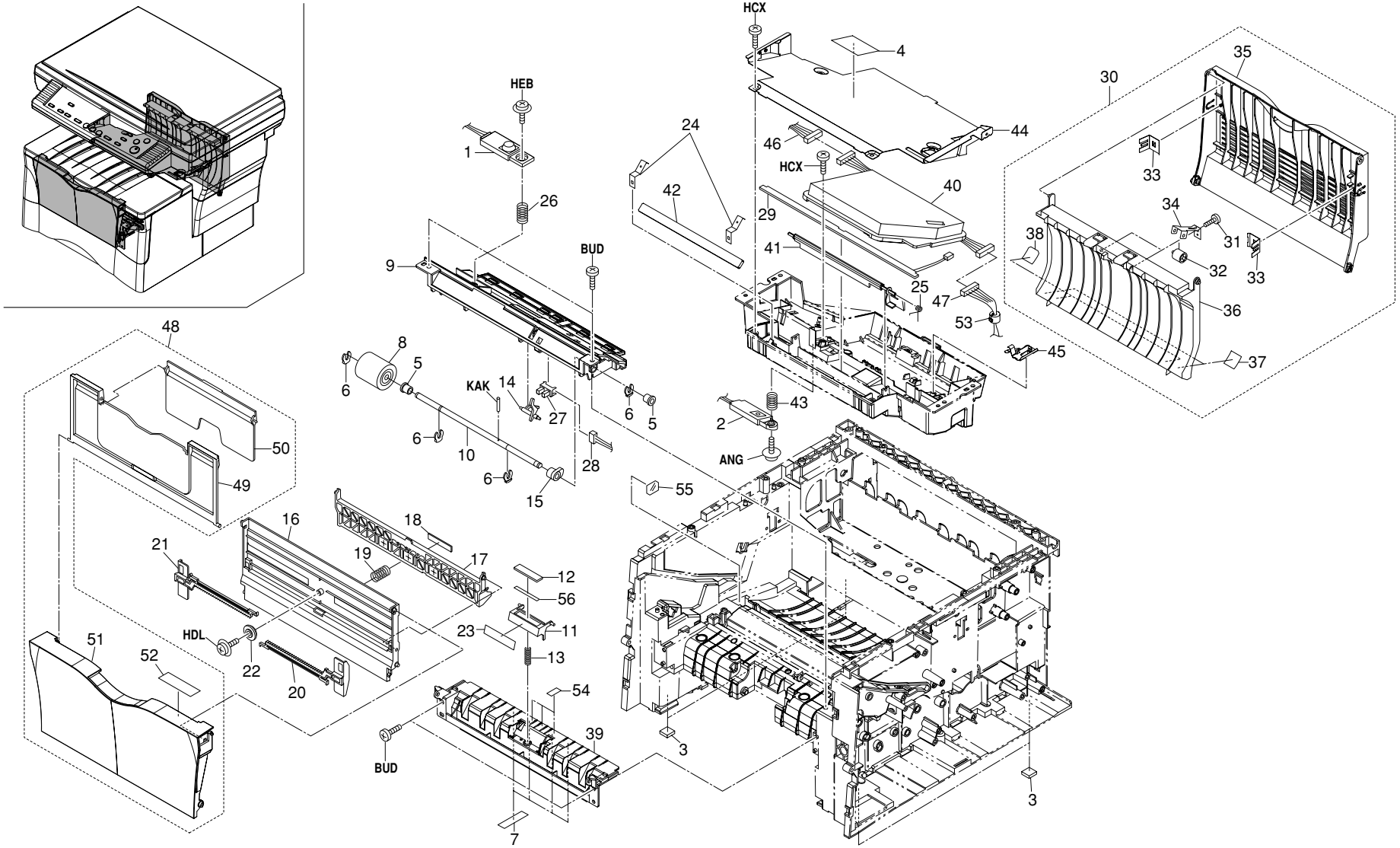

FIG. 3 PAPER FEED SECTION II & LSU

2DD

SP	Ref. No.	Part. No.	Alternative.	Description	Quantity		
					120V	230V	240V
◉	1	2DC68090		TE SENSOR ASSY	1	1	1
◉	2	2DC68100		FULL SENSOR ASSY	1	1	1
	3	2A802500	5MVS228RB019	FOOT	4	4	4
	4	2A805010	5MVVL661WN34	LABEL LASER CAUTION	1	1	1
	5	2A806030	5MVM176DN026	BUSH FEED	2	2	2
◉	6	2A806250	5MVX111DN003	RING STOPPER	4	4	4
	7	2A806480	5MVS312KF011	SHEET GUIDE	4	4	4
◉	8	2A806510	5AAVR0LL*045	ROLLER MPF ASSY	1	1	1
	9	2A806520	5MVX854SH002	HOLDER MP FEED	1	1	1
	10	2A806530	5MMT766SN008	SHAFT MPF	1	1	1
	11	2A806550	5MVX522DB004	SEPARATOR MPF	1	1	1
	12	2A806560	5MVS416XN001	PAD SEPARATOR MPF	1	1	1
	13	2A806570	5MMW261LD038	SPRING SEPA MPF	1	1	1
	14	2A806600	5MVX432DB010	ACTUATOR MPF	1	1	1
	15	2A806620	5MVX221DN014	CAM MPF R	1	1	1
	16	2A806661	5MVB872SH019	BASE MPF	1	1	1
	17	2A806670	5MVX852CB003	BOTTOM PLATE MPF	1	1	1
	18	2A806680	5MVS616XN002	PAD BOTTOM MPF	1	1	1
	19	2FM06030		SPRING BOTTOM MPF	1	1	1
	20	2A806700	5MVX752SH002	GUIDE MPF R	1	1	1
	21	2A806710	5MVX752SH003	GUIDE MPF L	1	1	1
	22	2A806720	5MVG137DN032	GEAR MPF	1	1	1
	23	2A806760	5MVS431TX001	TAPE SEPARATOR	1	1	1
	24	2A813030	5MMX221LD024	SPRING MIRROR	2	2	2
	25	2A813050	5MMW341LD006	SPRING SHUTTER LSU	1	1	1
	26	2A814570	5MMW261LD036	SPRING TE SENSOR	1	1	1
◉	27	2DC27180		SWITCH PI	1	1	1
	28	2A827580	5AACCNRM0GEA	CONN.CORD ASSY	1	1	1
◉	29	2DC01170		P.W.BOARD ASSY LED	1	1	1
◉	30	2A868700	5AAY3010E+58	COVER REAR ASSY	1	1	1
	31	•B8023060		BINDING TAP-TITE B SCREW M3X6	2	2	2
◉	32	•2A820100	5MVM273DB005	PULLEY EXIT	2	2	2
	33	•2A820340	5MMX322LD022	PLATE TRAY	2	2	2
	34	•2A820850	5MMX332LD021	BKT PULLEY FD	2	2	2
◉	35	•2A820950	5MVB874SH018	COVER REAR	1	1	1
	36	•2A820961	5MVB874SH019	TRAY EXIT FU	1	1	1
	37	•2A820970	5MVS222KN006	SHEET REAR	2	2	2
	38	•2A820980	5MVS222KW001	SHEET REAR B	2	2	2
	39	2DC06020		GUIDE TURN A	1	1	1
◉	40	2FM93110		LK-101	1	1	1
	41	2DC13020		SHUTTER LSU	1	1	1
	42	2DC13030		MIRROR LSU	1	1	1
	43	2DC13040		SPRING FULL SENSOR	1	1	1
	44	2DC26070		SHIELD LSU	1	1	1
	45	2DC26110		PLATE EARTH LSU	1	1	1
	46	2DC27070		WIRE MAIN-LSU	1	1	1
	47	2DC27140		WIRE ENGINE-LSU	1	1	1
◉	48	2DC93102		PARTS,MPF COVER SP	1	1	1
	49	•2A806730	5MVX861SH004	TRAY MPF A	1	1	1
	50	•2A806740	5MVX751SH001	TRAY MPF B	1	1	1
◉	51	•2DC04040		COVER MPF	1	1	1
	52	•2DC05090		LABEL MPF COVER	1	1	1
	53	2A627940		CORE 10-20X10	1	1	1
	54	2DC06080		SHEET MPF PAD	3	3	3
	55	2DC16050		SPACER TRANSFER	1	1	1
	56	2FM02710		SPACER PAD	1	1	1

• Parts with "•" are component parts or sub-assemblies of the assembly appearing immediately above them.
• Parts with "◉" indicates the spare parts.

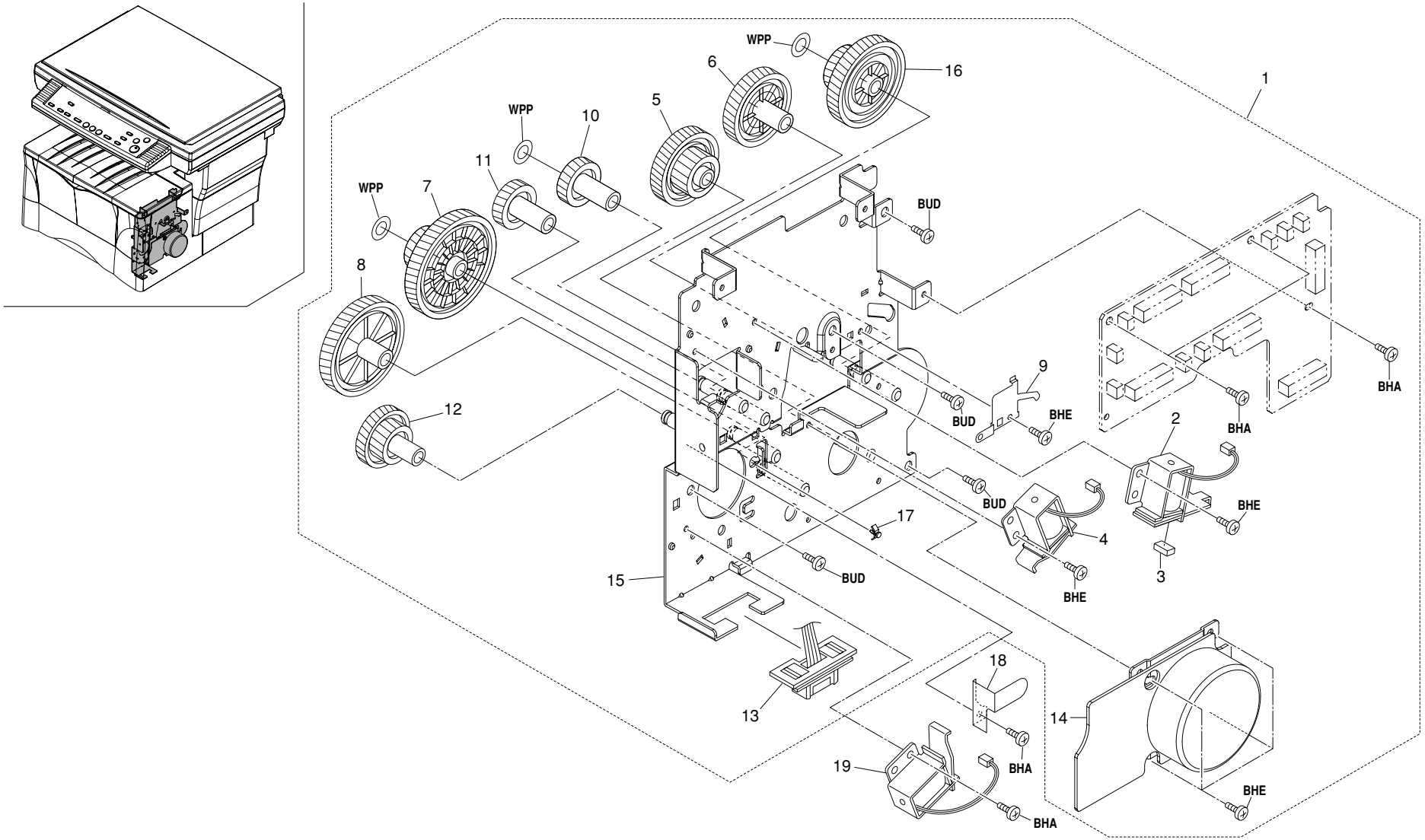
WPP
6
16
1
WPP
10
5
11
WPP
7
BUD
8
9
BHA
12
BUD
BHE
2
BHA
BUD
BHE
17
4
15
BUD
3
BHE
18
14
13
19
BHA
BHA
BHE

FIG. 4 DRIVING SECTION

SP	Ref. No.	Part. No.	Alternative.	Description	Quantity		
					120V	230V	240V
◉	1	2DC93082		PARTS,DRIVE UNIT SP	1	1	1
◉	2	•2A806142		SOLENOID REGIST	1	1	1
	3	•2A806280	5MVS217SN002	PAD SOLENOID	1	1	1
◉	4	•2A806590	5EZSA2402410501	SOLENOID MPF	1	1	1
◉	5	•2A822030	5MVG168DN017	GEAR Z68H-Z21H	1	1	1
◉	6	•2A822050	5MVG148DN044	GEAR Z40H	1	1	1
◉	7	•2A822060	5MVG169DN032	GEAR Z95H-Z21H	1	1	1
◉	8	•2A822070	5MVG169DN033	GEAR Z53H	1	1	1
	9	•2A822150	5MMX521LD005	PLATE EARTH DRUM	1	1	1
◉	10	•2A822170	5MVG138DN042	GEAR Z24H	1	1	1
◉	11	•2A822180	5MVG137DN029	GEAR Z21H	1	1	1
◉	12	•2A822190	5MVG148DN050	GEAR Z36H-Z21H	1	1	1
	13	•2A827590	5AACCNRM1GEA	CONN.CORD ASSY	1	1	1
◉	14	•2DC22010		MOTOR MAIN	1	1	1
	15	•2DC22020		MOUNT MACHINE DRIVE	1	1	1
◉	16	•2DC22030		GEAR 48/21	1	1	1
	17	•M2108800		SPACER,KGPS-3.5S(KITAGAWA)	1	1	1
	18	2A806750	5MMX332LD013	PLATE EARTH MPF	1	1	1
◉	19	2A806131		SOLENOID FEED	1	1	1

• Parts with "•" are component parts or sub-assemblies of the assembly appearing immediately above them.
• Parts with "◉" indicates the spare parts.

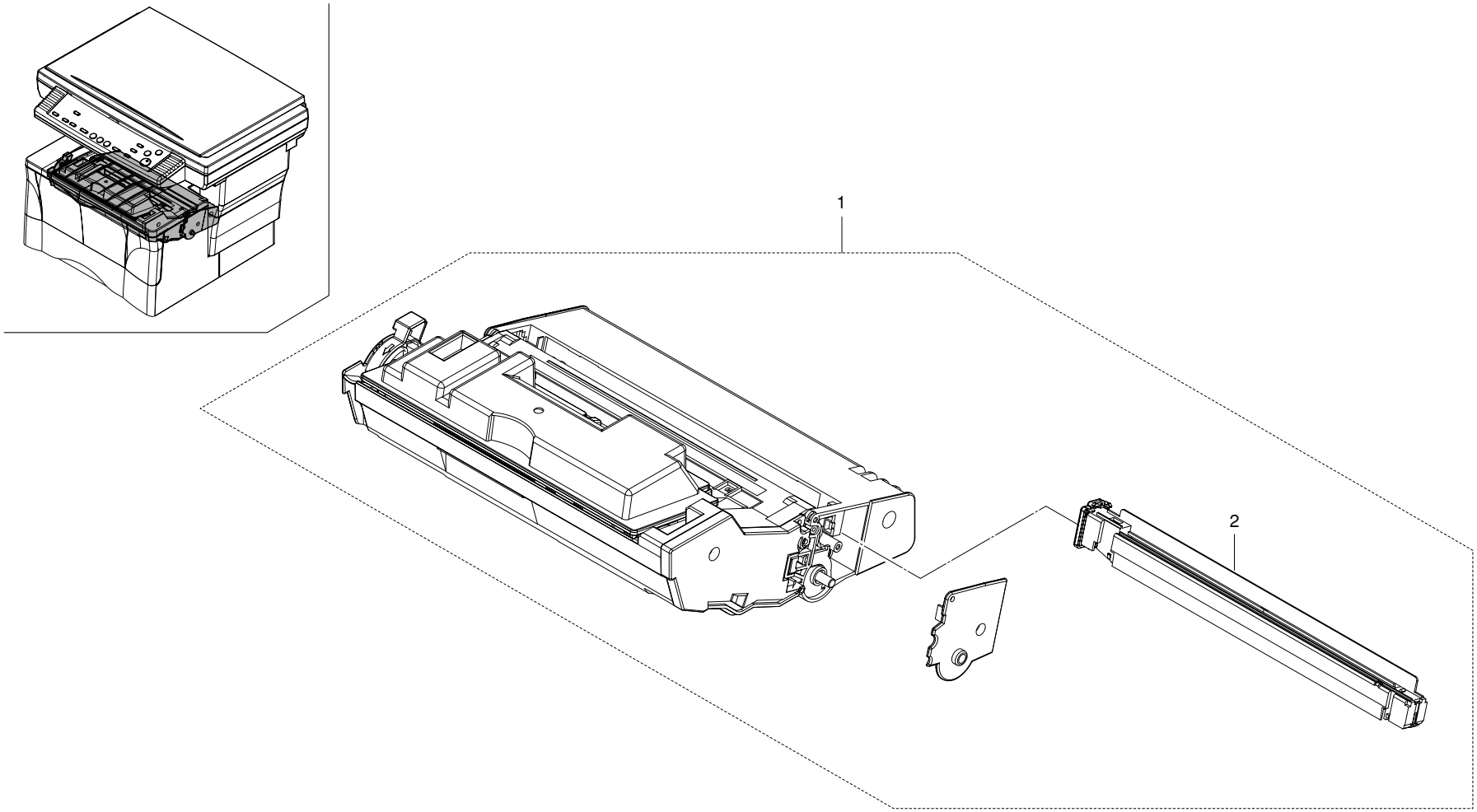
1
2

FIG. 5 PROCESS UNIT

SP	Ref. No.	Part. No.	Alternative.	Description	Quantity		
					120V	230V	240V
◉	1	2FM93093		PU-102 PROCESS UNIT	1	1	1
◉	2	•2A893062	5PLPXU5AEKX	MC-40 MCH ASSY	1	1	1

• Parts with "•" are component parts or sub-assemblies of the assembly appearing immediately above them.
• Parts with "◉" indicates the spare parts.

FIG. 6 FUSER UNIT

2DD

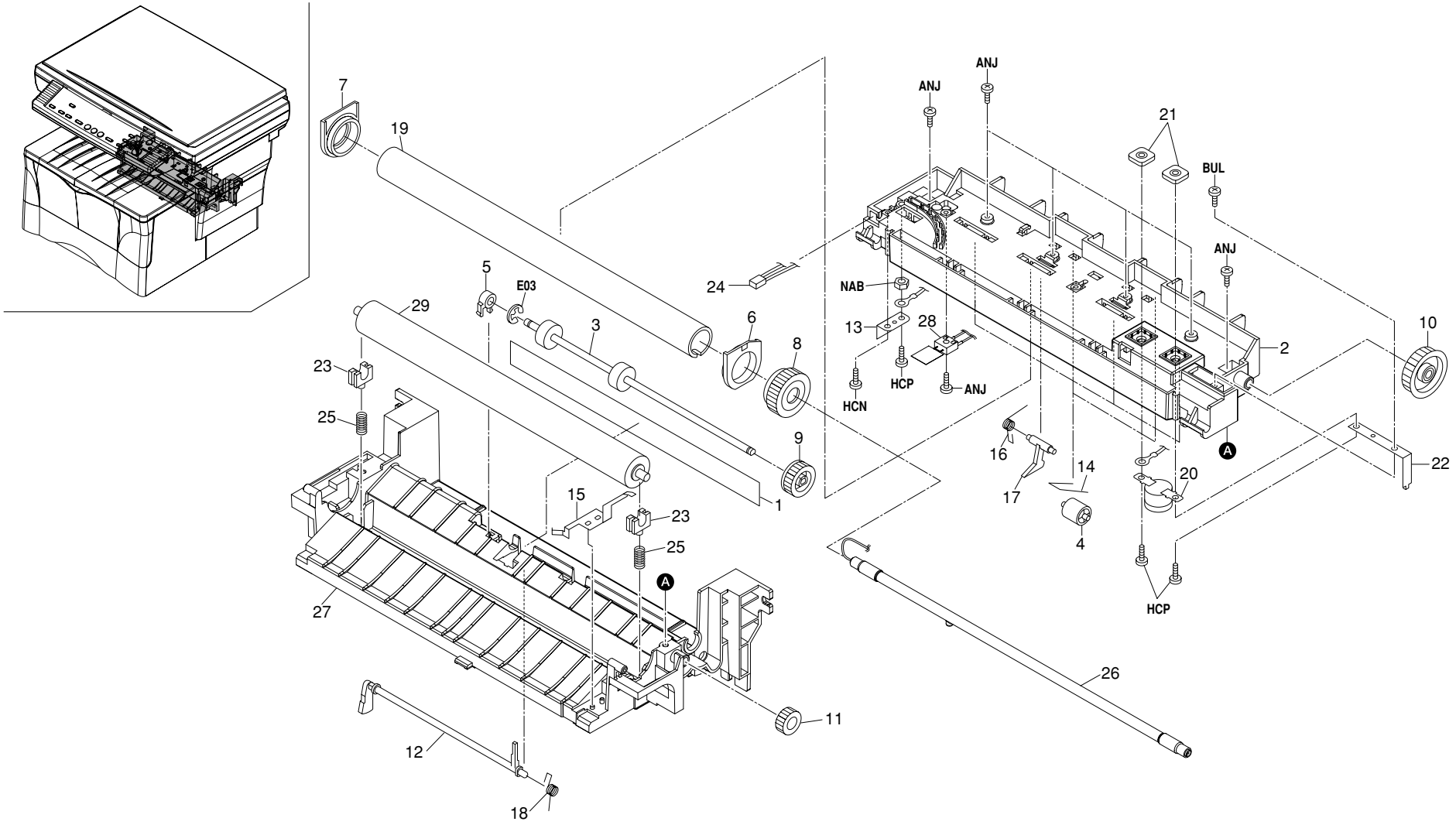

FIG. 6 FUSER UNIT

SP	Ref. No.	Part. No.	Alternative.	Description	Quantity		
					120V	230V	240V
◉		2DC93051		PARTS,FUSER UNIT(E)SP		1	1
◉		2DC93061		PARTS,FUSER UNIT(U)SP	1		
	1	•2A805020	5MVVL731WN14	LABEL FUSER CAUTION	1	1	1
	2	•2A820023	5MVB863KB003	FRAME FUSER UP	1	1	1
◉	3	•2A820080	5MMT774SN001	ROLLER EXIT LOW	1	1	1
◉	4	•2A820100	5MVM273DB005	PULLEY EXIT	2	2	2
	5	•2A820110	5MVX211DB016	BUSH EXIT	1	1	1
	6	•2A820120	5MVM188XN015	BUSH HEAT R	1	1	1
	7	•2A820131	5MVM188XN016	BUSH HEAT L	1	1	1
◉	8	•2A820160	5MVG148XN008	GEAR HEAT Z33	1	1	1
◉	9	•2A820170	5MVG137DN031	GEAR EXIT Z23	1	1	1
◉	10	•2A820180	5MVG148XN009	GEAR IDLE Z34	1	1	1
◉	11	•2A820190	5MVG127DN070	GEAR IDLE Z18	1	1	1
	12	•2A820200	5MVX731CB002	ACTUATOR FUSER A	1	1	1
	13	•2A820220	5MML211RD002	HOLDER LAMP B	1	1	1
	14	•2A820260	5MMW601LD011	SPRING PULLEY	2	2	2
	15	•2A820280	5MMX665LD004	PLATE EARTH FUSER	1	1	1
	16	•2A820350	5MMW261LD055	SPRING SEPARATOR	4	4	4
	17	•2A820360	5AAVSEPRT015	SEPARATOR ASSY	4	4	4
	18	•2A820520	5MMW261LD017	SPRING ACTUATOR	1	1	1
◉	19	•2BY20010	5MMT876AX002	ROLLER HEAT	1	1	1
◉	20	•2BY20020	5EYFFQ16001++01	THERMOSTAT 250V 160	1	1	1
	21	•2BY20050	5MMS111SL002	NUT FUSER A	2	2	2
	22	•2BY20060	5MML531CG001	HOLDER LAMP A	1	1	1
	23	•2BY20070	5MVX221XN004	BUSH PRESS	2	2	2
	24	•2BY27560	5AACCNSH3GEA	CONN.CORD ASSY S02774		1	1
	24	•2BY27570	5AACCNSH4GEA	CONN.CORD ASSY S02775	1		
	25	•2DC20010		SPRING PRESS ROLLER	2	2	2
◉	26	•2DC20020		HEATER 230 FIXING		1	1
◉	26	•2DC20030		HEATER 120 FIXING	1		
	27	•2DC20040		FRAME FUSER LOW (1/2)	1	1	1
◉	28	•2DC20050		THERMISTOR FUSER	1	1	1
	29	•2DC20060		ROLLER PRESS	1	1	1

• Parts with "•" are component parts or sub-assemblies of the assembly appearing immediately above them.
• Parts with "◉" indicates the spare parts.

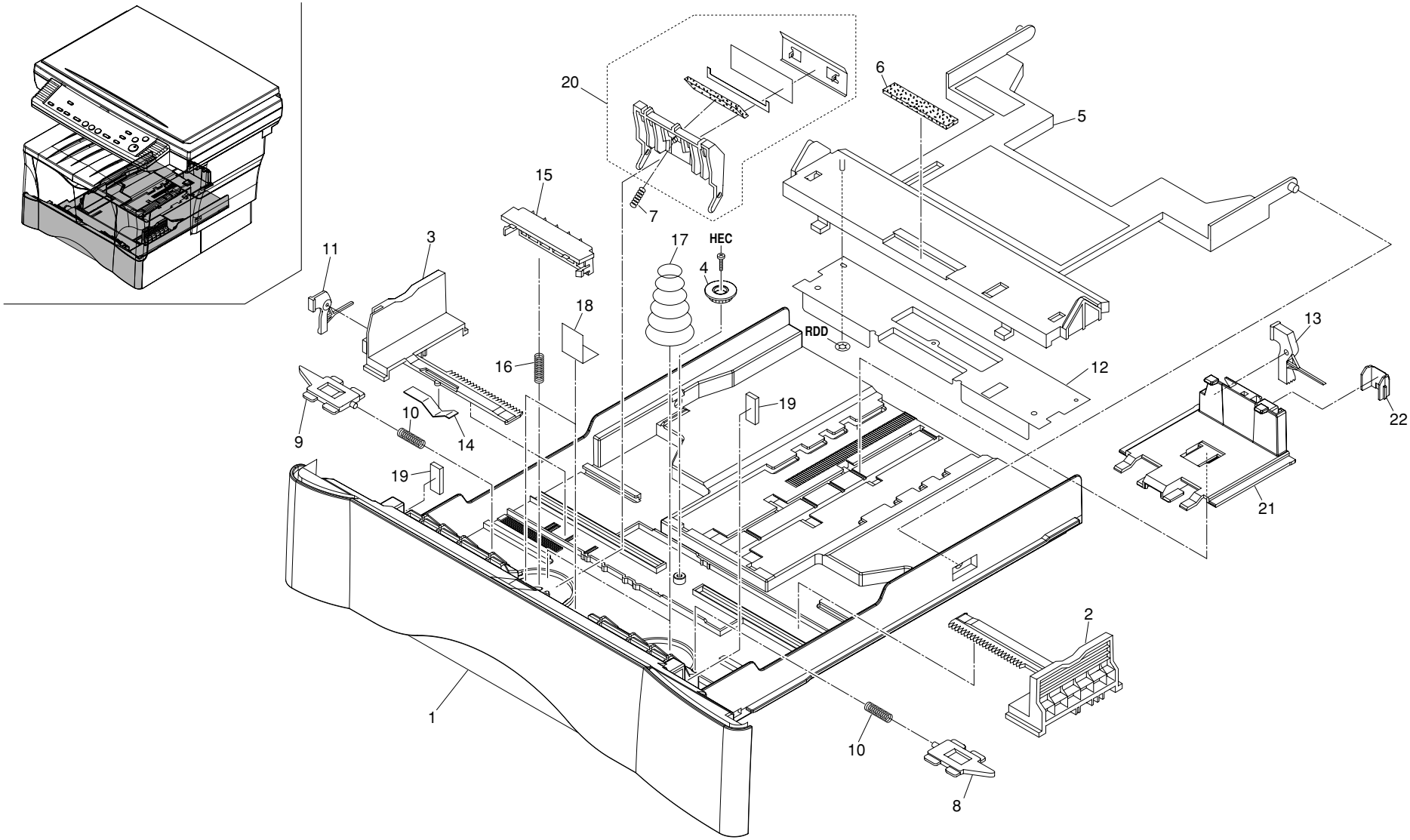
20
6
5
15
7
11
3
17
HEC
4
18
RDD
13
12
16
19
10
14
9
22
19
21
2
1
10
8

FIG. 7 CASSETTE

SP	Ref. No.	Part. No.	Alternative.	Description	Quantity		
					120V	230V	240V
◉		2FM93101		CT-101(LTR) CASSETTE ASSY	1		
◉		2FM93081		CT-101(A4) CASSETTE ASSY		1	1
	1	•2A807010	5MVB886SH063	BASE CASSETTE	1	1	1
	2	•2FM06020		GUIDE SIDE R	1	1	1
	3	•2FM06010		GUIDE SIDE L	1	1	1
◉	4	•2A807050	5MVG127DN071	GEAR CASSETTE	1	1	1
	5	•2A807060	5MVX882SH002	BOTTOM CASSETTE	1	1	1
	6	•2A807080	5MVS616XN001	PAD BOTTOM	1	1	1
	7	•2A807110	5MMW251LD047	SPRING SEPARATOR C	1	1	1
	8	•2A807121	5MVX431DW001	LOCK CASSETTE R	1	1	1
	9	•2A807131	5MVX431DW002	LOCK CASSETTE L	1	1	1
	10	•2A807140	5MMW251LD045	SPRING LOCK	2	2	2
	11	•2A807161	5MVX541DG003	LEVER SIDE	1	1	1
	12	•2A807170	5MMS856SL001	PLATE BOTTOM	1	1	1
	13	•2A807191	5MVX541DG002	LEVER REAR	1	1	1
	14	•2A807510	5MMP141LD002	PLATE SIDE GUIDE	1	1	1
	15	•2A807520	5MMP141LD003	PLATE STOPPER	1	1	1
◉	16	•2A807530	5MMW171LD006	SPRING STOPPER	1	1	1
	17	•2A807540	5MMW552LD002	SPRING CASSETTE	2	2	2
	18	•2A807550	5MVL311KF003	SHEET CASSETTE	2	2	2
	19	•2A807910	5MVS315CN001	SPACER CASSETTE	2	2	2
	20	•2FM68320		SEPARATOR PAPER ASSY	1	1	1
◉	21	•2DC07010		STOPPER PAPER	1	1	1
◉	22	•2DC07020		POSITIONING FOLIO PAPER	1	1	1

• Parts with "•" are component parts or sub-assemblies of the assembly appearing immediately above them.
• Parts with "◉" indicates the spare parts.

FIG. 8 OPTICAL SECTION

2DD

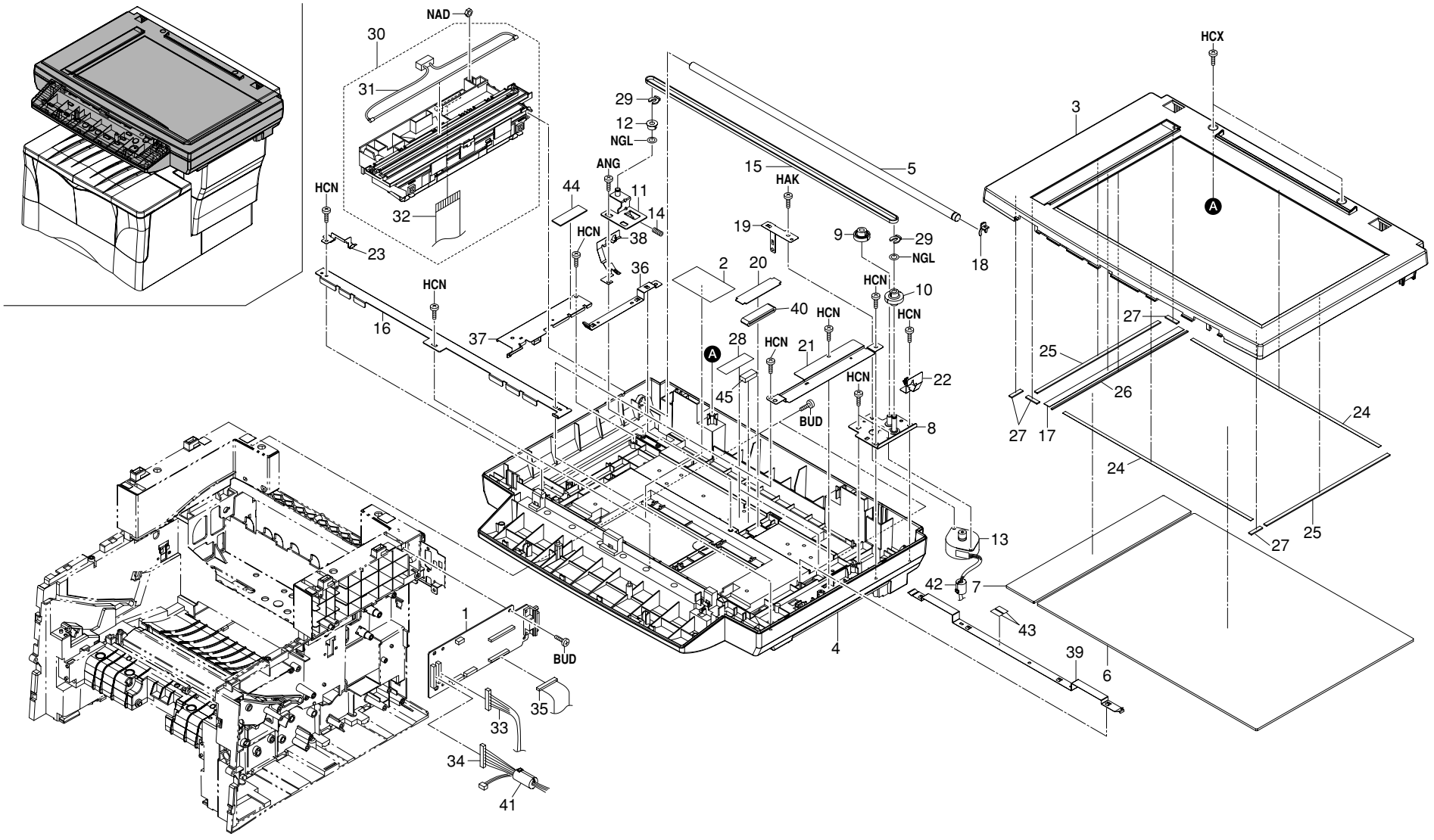

FIG. 8 OPTICAL SECTION

2DD

SP	Ref. No.	Part. No.	Alternative.	Description	Quantity		
					120V	230V	240V
◉	1	2DC01020		P.W.BOARD ASSY SCANNER	1	1	1
	2	2DC05010		LABEL CONTACT GLASS	1	1	1
	3	2DC12010		UPPER FRAME SCANNER(1/2)	1	1	1
	4	2DC12020		LOWER FRAME SCANNER(1/4)	1	1	1
	5	2DC12040		SHAFT SCANNER	1	1	1
◉	6	2DC12050		CONTACT GLASS	1	1	1
◉	7	2DC12060		CONTACT GLASS DF	1	1	1
	8	2DC12110		MOUNT SCANNER MOTOR	1	1	1
◉	9	2DC12120		GEAR SCANNER 39/22	1	1	1
◉	10	2DC12130		GEAR SCANNER 45/18	1	1	1
	11	2DC12140		MOUNT TENSION PULLEY	1	1	1
◉	12	2DC12150		PULLEY TENSION	1	1	1
◉	13	2DC12160		MOTOR SCANNER	1	1	1
	14	2DC12170		SPRING TENSION	1	1	1
◉	15	2DC12180		BELT SCANNER	1	1	1
	16	2DC12190		RAIL SCANNER	1	1	1
	17	2DC12210		STANDARD PLATE SHADING	1	1	1
◉	18	2DC12280		STOPPER 8	1	1	1
	19	2DC12300		GROUND PLATE SCANNER	1	1	1
	20	2DC12310		HOLDER FFC	1	1	1
	21	2DC12330		PLATE EARTH SCANNER A	1	1	1
	22	2DC12340		PLATE EARTH SCANNER B	1	1	1
	23	2DC12350		PLATE EARTH SCANNER C	1	1	1
	24	2DC12360		TAPE CONTACT GLASS A	2	2	2
	25	2DC12370		TAPE CONTACT GLASS B	2	2	2
	26	2DC12380		TAPE CONTACT GLASS C	1	1	1
	27	2DC12390		TAPE CONTACT GLASS D	4	4	4
	28	2DC12400		TAPE FFC	2	2	2
◉	29	2A806250	5MVX111DN003	RING STOPPER	2	2	2
◉	30	2DD93010	302DD93010	PARTS, IMAGE SCANNER, SP	1	1	1
◉	31	•2DC12200		LAMP SCANNER	1	1	1
	32	•2DD27091		CONN.CORD ASSY SCN-CCD	1	1	1
	33	2DD27040		CONN.CORD ASSY SCN-MAIN1	1	1	1
	34	2DD27050		CONN.CORD ASSY SCN-PANEL	1	1	1
	35	2DC27080		CONN.CORD ASSY SCANNER-MAIN2	1	1	1
	36	2DC12420		PLATE EARTH SCANNER D	1	1	1
	37	2DC12430		PLATE EARTH SCANNER E	1	1	1
	38	2DC12440		PLATE EARTH SCANNER F	1	1	1
	39	2DC12450		PLATE EARTH SCANNER G	1	1	1
	40	2DC27150		CORE FFC1	1	1	1
	41	2BL27650		CORE 6-18X34	1	1	1
	42	33927590		CORE 7-15X18	1	1	1
	43	2DC12460		SEAL EARTH PLATE	2	2	2
	44	2DD27160		SHEET EMI	1	1	1
	45	2DD27110		GASKET SHIELD 3X4X10	1	1	1

- Parts with "•" are component parts or sub-assemblies of the assembly appearing immediately above them.
- Parts with "◉" indicates the spare parts.

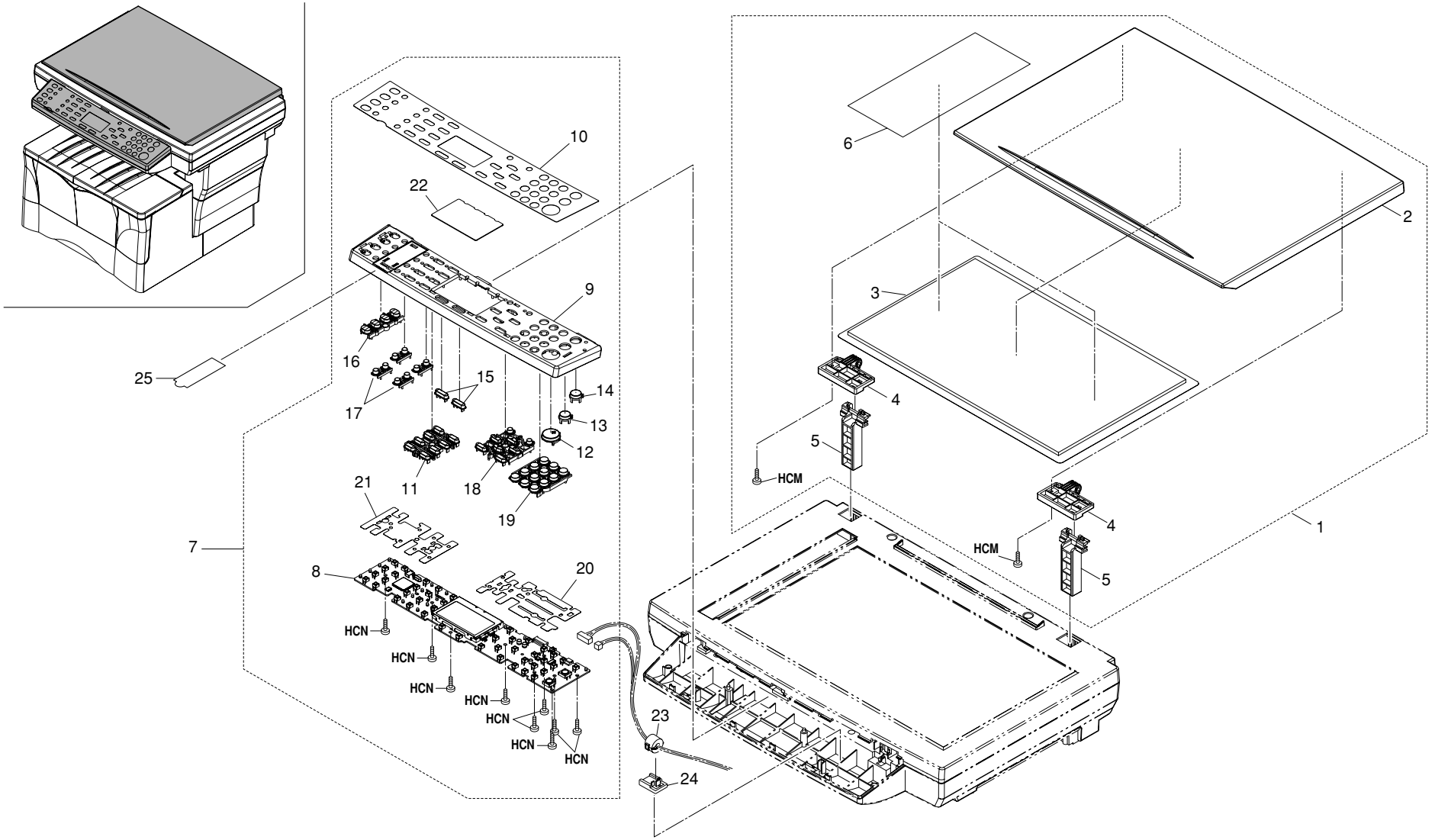
10
22
9
25
16
15
14
17
13
12
11
18
19
21
7
8
20
HCN
HCN
HCN
HCN
HCN
HCN
HCN
23
24
6
2
3
4
5
HCM
4
5
HCM
1

FIG. 9 OPERATION UNIT & ORIGINAL HOLDER

SP	Ref. No.	Part. No.	Alternative.	Description	Quantity		
					120V	230V	240V
◉	1	2DC93111		PARTS,PLATEN COVER SP	1	1	1
◉	2	•2DC11010		COVER ORIGINAL HOLDER(1/2)	1	1	1
◉	3	•2DC11020		MAT ORIGINAL HOLDER	1	1	1
◉	4	•2DC11031		UPPER HINGE	2	2	2
◉	5	•2DC11040		LOWER HINGE	2	2	2
	6	•2DC11050		TAPE ORIGINAL HOLDER	2	2	2
◉	7	2DD93020		PARTS,OPE PANEL (E),SP	1	1	1
◉	8	•2DD01050		P.W.BOARD ASSY LCD	1	1	1
◉	9	•2DD25010		COVER OPERATION(1/2)	1	1	1
◉	10	•2DD25020		SHEET OPERATION E	1	1	1
	11	•2DD25040		KEY FUNCTION	1	1	1
◉	12	•2DC25052		KEY PRINT	1	1	1
◉	13	•2DC25060		KEY STOP	1	1	1
◉	14	•2DC25070		KEY RESET	1	1	1
	15	•2DD25050		KEY DECISION	2	2	2
	16	•2DD25060		KEY STATUS	1	1	1
	17	•2DD25070		KEY ONE TOUCH	4	4	4
	18	•2DD25080		KEY CONTROL	1	1	1
	19	•2DD25090		KEY OPERATION 10	1	1	1
	20	•2DD25130		RIGHT DUST SHIELD	1	1	1
	21	•2DD25140		LEFT DUST SHIELD	1	1	1
	22	•2DD25150		BARRIER LCD	1	1	1
	23	3HK27050		CORE 8-16X10	1	1	1
	24	2DD27100		BINDING CORE	1	1	1
	25	2DD25190		SHEET ONE TOUCH	1	1	1

• Parts with "•" are component parts or sub-assemblies of the assembly appearing immediately above them.
• Parts with "◉" indicates the spare parts.

TOOLS

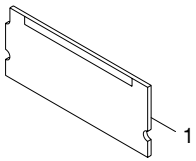

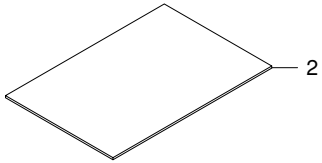

SUPPLIED PARTS

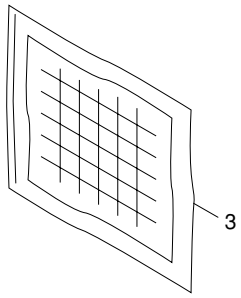

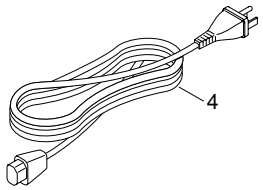

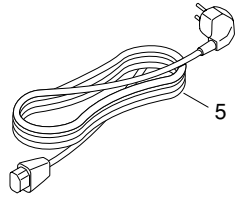

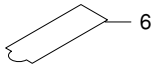

FIG. 10 TOOLS & SUPPLIED PARTS

SP	Ref. No.	Part. No.	Alternative.	Description	Quantity		
					120V	230V	240V
◉	1	2DD01080		P.W.BOARD ASSY DIMM	1	1	1
	2	2A668011		SPECIAL TOOL,SCANNER ADJUSTMENT ORIGINAL	1	1	1
	3	2A802530	5AAMDK5P**01	CLEANING KIT C	1	1	1
	4	2DC27410		AC CORD 120 ASSY	1		
	5	2AR27800		POWER CORD(230)		1	1
	6	2DD25190		SHEET ONE TOUCH	4	4	4

• Parts with "•" are component parts or sub-assemblies of the assembly appearing immediately above them.
• Parts with "◉" indicates the spare parts.

SP	Part. No.	Alternative.	Description	Quantity			Fig. No.
				120V	230V	240V	
	19512210		RETAINING PIN,MIRROR FRAME	1	1	1	1
	2AR27800		POWER CORD(230)		1	1	10
	2A627940		CORE 10-20X10	2	2	2	2,3
	2A668011		SPECIAL TOOL,SCANNER ADJUSTMENT OR	1	1	1	10
	2A802030	5MVB874CH002	COVER PWB	1	1	1	2
	2A802040	5MVX721DN001	LEVER INTERLOCK	1	1	1	2
	2A802050	5MVT653DW001	PIN CASSETTE	1	1	1	2
	2A802060	5MMW351LD006	SPRING INTERLOCK	1	1	1	2
	2A802070	5MMW341LD005	SPRING PIN CASSETTE	1	1	1	2
	2A802500	5MVS228RB019	FOOT	4	4	4	3
	2A802520	5MMT263SN012	SCREW OP	3	3	3	1,2
	2A802530	5AAMDK5P**01	CLEANING KIT C	1	1	1	10
	2A804080	5MVX422DN005	HINGE FRONT L	1	1	1	1
	2A804090	5MVX422DN006	HINGE FRONT R	1	1	1	1
	2A805010	5MVVL661WN34	LABEL LASER CAUTION	1	1	1	3
	2A805020	5MVVL731WN14	LABEL FUSER CAUTION	1	1	1	6
	2A806020	5MMT766SN007	SHAFT FEED	1	1	1	2
	2A806030	5MVM176DN026	BUSH FEED	4	4	4	2,3
◉	2A806040	5MMT876SN073	ROLLER REGIST LOW	1	1	1	2
◉	2A806050	5MMT865SN010	ROLLER REGIST UP	1	1	1	2
◉	2A806090	5MVX432DB009	ACTUATOR REGIST	1	1	1	2
◉	2A806100	5MVX542DB003	ACTUATOR PE	1	1	1	2
◉	2A806120	5AAVCLTCH016	CLUTCH REGIST	1	1	1	2
◉	2A806131		SOLENOID FEED	1	1	1	4
◉	2A806142		SOLENOID REGIST	1	1	1	4
	2A806170	5MVS441KF008	SHEET REGIST SW	1	1	1	2
	2A806210	5MMX532LD005	CONTACT EARTH REG	1	1	1	2
◉	2A806220	5MVT676DB002	PULLEY FEED	1	1	1	2
◉	2A806230	5MVG127DB047	GEAR REGIST Z20	1	1	1	2
◉	2A806240	5MVG126DB025	GEAR REGIST Z13	1	1	1	2
◉	2A806250	5MVX111DN003	RING STOPPER	10	10	10	2,3,8
	2A806260	5MVM161DW001	BUSH PULLEY FEED	2	2	2	2
	2A806280	5MVS217SN002	PAD SOLENOID	1	1	1	4
	2A806410	5MMW261LD023	SPRING REGIST R	2	2	2	2
	2A806480	5MVS312KF011	SHEET GUIDE	4	4	4	3
◉	2A806510	5AAVR0LL*045	ROLLER MPF ASSY	1	1	1	3
	2A806520	5MVX854SH002	HOLDER MP FEED	1	1	1	3
	2A806530	5MMT766SN008	SHAFT MPF	1	1	1	3
	2A806550	5MVX522DB004	SEPARATOR MPF	1	1	1	3
	2A806560	5MVS416XN001	PAD SEPARATOR MPF	1	1	1	3

SP	Part. No.	Alternative.	Description	Quantity			Fig. No.
				120V	230V	240V	
	2A806570	5MMW261LD038	SPRING SEPA MPF	1	1	1	3
◉	2A806580	5AAVCLTCH017	CLUTCH MPF	1	1	1	2
◉	2A806590	5EZSA2402410501	SOLENOID MPF	1	1	1	4
	2A806600	5MVX432DB010	ACTUATOR MPF	1	1	1	3
	2A806620	5MVX221DN014	CAM MPF R	1	1	1	3
	2A806661	5MVB872SH019	BASE MPF	1	1	1	3
	2A806670	5MVX852CB003	BOTTOM PLATE MPF	1	1	1	3
	2A806680	5MVS616XN002	PAD BOTTOM MPF	1	1	1	3
	2A806700	5MVX752SH002	GUIDE MPF R	1	1	1	3
	2A806710	5MVX752SH003	GUIDE MPF L	1	1	1	3
	2A806720	5MVG137DN032	GEAR MPF	1	1	1	3
	2A806730	5MVX861SH004	TRAY MPF A	1	1	1	3
	2A806740	5MVX751SH001	TRAY MPF B	1	1	1	3
	2A806750	5MMX332LD013	PLATE EARTH MPF	1	1	1	4
	2A806760	5MVS431TX001	TAPE SEPARATOR	1	1	1	3
	2A807010	5MVB886SH063	BASE CASSETTE	1	1	1	7
◉	2A807050	5MVG127DN071	GEAR CASSETTE	1	1	1	7
	2A807060	5MVX882SH002	BOTTOM CASSETTE	1	1	1	7
	2A807080	5MVS616XN001	PAD BOTTOM	1	1	1	7
	2A807110	5MMW251LD047	SPRING SEPARATOR C	1	1	1	7
	2A807121	5MVX431DW001	LOCK CASSETTE R	1	1	1	7
	2A807131	5MVX431DW002	LOCK CASSETTE L	1	1	1	7
	2A807140	5MMW251LD045	SPRING LOCK	2	2	2	7
	2A807161	5MVX541DG003	LEVER SIDE	1	1	1	7
	2A807170	5MMS856SL001	PLATE BOTTOM	1	1	1	7
	2A807191	5MVX541DG002	LEVER REAR	1	1	1	7
	2A807510	5MMP141LD002	PLATE SIDE GUIDE	1	1	1	7
	2A807520	5MMP141LD003	PLATE STOPPER	1	1	1	7
◉	2A807530	5MMW171LD006	SPRING STOPPER	1	1	1	7
	2A807540	5MMW552LD002	SPRING CASSETTE	2	2	2	7
	2A807550	5MVL311KF003	SHEET CASSETTE	2	2	2	7
	2A807910	5MVS315CN001	SPACER CASSETTE	2	2	2	7
	2A813030	5MMX221LD024	SPRING MIRROR	2	2	2	3
	2A813050	5MMW341LD006	SPRING SHUTTER LSU	1	1	1	3
	2A814570	5MMW261LD036	SPRING TE SENSOR	1	1	1	3
	2A815010	5MMW361LD015	SPRING PIN BIAS	1	1	1	2
	2A815020	5MMT365SN003	PIN CONTACT BIAS	1	1	1	2
◉	2A816020	5MVX221DB023	BUSH TC L	1	1	1	2
◉	2A816030	5MVX221DW008	BUSH TC R	1	1	1	2
	2A816040	5MMW251LD043	SPRING TC L	1	1	1	2

• Parts with "◉" indicates the spare parts.

SP	Part. No.	Alternative.	Description	Quantity			Fig. No.
				120V	230V	240V	
◉	2A816060	5MVG127DB048	GEAR TC Z18	1	1	1	2
	2A820023	5MVB863KB003	FRAME FUSER UP	1	1	1	6
◉	2A820080	5MMT774SN001	ROLLER EXIT LOW	1	1	1	6
◉	2A820090	5MMT874SN007	ROLLER EXIT UP	1	1	1	2
◉	2A820100	5MVM273DB005	PULLEY EXIT	4	4	4	3,6
	2A820110	5MVX211DB016	BUSH EXIT	1	1	1	6
	2A820120	5MVM188XN015	BUSH HEAT R	1	1	1	6
	2A820131	5MVM188XN016	BUSH HEAT L	1	1	1	6
◉	2A820160	5MVG148XN008	GEAR HEAT Z33	1	1	1	6
◉	2A820170	5MVG137DN031	GEAR EXIT Z23	1	1	1	6
◉	2A820180	5MVG148XN009	GEAR IDLE Z34	1	1	1	6
◉	2A820190	5MVG127DN070	GEAR IDLE Z18	1	1	1	6
	2A820200	5MVX731CB002	ACTUATOR FUSER A	1	1	1	6
	2A820220	5MML211RD002	HOLDER LAMP B	1	1	1	6
	2A820260	5MMW601LD011	SPRING PULLEY	2	2	2	6
	2A820280	5MMX665LD004	PLATE EARTH FUSER	1	1	1	6
◉	2A820290	5MVG137DN030	GEAR EXIT Z23 UP	1	1	1	2
	2A820300	5MVX322SB020	ACTUATOR FUSER B	1	1	1	2
	2A820340	5MMX322LD022	PLATE TRAY	2	2	2	3
	2A820350	5MMW261LD055	SPRING SEPARATOR	4	4	4	6
	2A820360	5AAVSEPRT015	SEPARATOR ASSY	4	4	4	6
	2A820520	5MMW261LD017	SPRING ACTUATOR	1	1	1	6
	2A820850	5MMX332LD021	BKT PULLEY FD	2	2	2	3
◉	2A820950	5MVB874SH018	COVER REAR	1	1	1	3
	2A820961	5MVB874SH019	TRAY EXIT FU	1	1	1	3
	2A820970	5MVS222KN006	SHEET REAR	2	2	2	3
	2A820980	5MVS222KW001	SHEET REAR B	2	2	2	3
	2A821010	5MVM176DW001	BUSH EXIT	1	1	1	2
◉	2A822030	5MVG168DN017	GEAR Z68H-Z21H	1	1	1	4
◉	2A822050	5MVG148DN044	GEAR Z40H	1	1	1	4
◉	2A822060	5MVG169DN032	GEAR Z95H-Z21H	1	1	1	4
◉	2A822070	5MVG169DN033	GEAR Z53H	1	1	1	4
◉	2A822080	5MVG148DN045	GEAR Z38H	1	1	1	2
◉	2A822090	5MVG148DN046	GEAR FREE Z40H	1	1	1	2
◉	2A822100	5MVG138DN041	GEAR FREE Z25S	1	1	1	2
◉	2A822110	5MVG148DN047	GEAR Z34S	1	1	1	2
◉	2A822120	5MVG148DN048	GEAR Z40S	1	1	1	2
◉	2A822130	5MMT364SN003	PIN DRIVE	3	3	3	2
◉	2A822140	5MMW271LD010	SPRING FREE	1	1	1	2
	2A822150	5MMX521LD005	PLATE EARTH DRUM	1	1	1	4

SP	Part. No.	Alternative.	Description	Quantity			Fig. No.
				120V	230V	240V	
◉	2A822160	5MVG148DN049	GEAR Z37S	1	1	1	2
◉	2A822170	5MVG138DN042	GEAR Z24H	1	1	1	4
◉	2A822180	5MVG137DN029	GEAR Z21H	1	1	1	4
◉	2A822190	5MVG148DN050	GEAR Z36H-Z21H	1	1	1	4
	2A822200	5MVB663SB048	COVER CORD	1	1	1	2
	2A827010	5MMS775SL001	PLATE CONTROLLER	1	1	1	2
	2A827030	5MMX773SL001	PLATE SW REG		1	1	2
	2A827580	5AACCNRM0GEA	CONN.CORD ASSY	1	1	1	3
	2A827590	5AACCNRM1GEA	CONN.CORD ASSY	1	1	1	4
	2A868610	5AAY3010E+31	EARTH GUIDE ASSY	1	1	1	2
◉	2A868700	5AAY3010E+58	COVER REAR ASSY	1	1	1	3
◉	2A893062	5PLPXU5AEKX	MC-40 MCH ASSY	1	1	1	5
	2BL27650		CORE 6-18X34	2	2	2	2,8
	2BY02010	5MMX632LD008	CONTACT MAIN MR	1	1	1	2
	2BY06040	5MMW261LD057	SPRING ACTUATOR REG	1	1	1	2
	2BY06050	5MVS622KF011	SHEET REGIST R	1	1	1	2
	2BY06060	5MVS622KF012	SHEET REGIST L	1	1	1	2
◉	2BY20010	5MMT876AX002	ROLLER HEAT	1	1	1	6
◉	2BY20020	5EYFFQ16001++01	THERMOSTAT 250V 160	1	1	1	6
	2BY20050	5MMS111SL002	NUT FUSER A	2	2	2	6
	2BY20060	5MML531CG001	HOLDER LAMP A	1	1	1	6
	2BY20070	5MVX221XN004	BUSH PRESS	2	2	2	6
	2BY27560	5AACCNSH3GEA	CONN.CORD ASSY S02774		1	1	6
	2BY27570	5AACCNSH4GEA	CONN.CORD ASSY S02775	1			6
◉	2DC01020		P.W.BOARD ASSY SCANNER	1	1	1	8
◉	2DC01170		P.W.BOARD ASSY LED	1	1	1	3
	2DC02010		FRAME BASE (1/8)	1	1	1	2
	2DC02020		STAY SCANNER LEFT	1	1	1	2
	2DC02030		STAY SCANNER RIGHT	1	1	1	2
	2DC02040		FRAME MIDDLE (1/3)	1	1	1	2
	2DC02050		MOUNT SCANNER PCB	1	1	1	2
	2DC02060		PLATE EARTH STAY L	1	1	1	2
	2DC02100		FILM PS LOW	1	1	1	2
◉	2DC04020		COVER LEFT (1/2)	1	1	1	1
	2DC04030		COVER REAR	1	1	1	1
◉	2DC04040		COVER MPF	1	1	1	3
◉	2DC04050		COVER DIMM	1	1	1	1
◉	2DC04060		COVER RIGHT (1/2)	1	1	1	1
◉	2DC04080		COVER TOP (1/3)	1	1	1	1
	2DC04090		PLATE SHIELD	1	1	1	1

• Parts with "◉" indicates the spare parts.

SP	Part. No.	Alternative.	Description	Quantity			Fig. No.
				120V	230V	240V	
	2DC05010		LABEL CONTACT GLASS	1	1	1	8
	2DC05070		LABEL FRONT COVER	1	1	1	1
	2DC05090		LABEL MPF COVER	1	1	1	3
◉	2DC06010		CLUTCH FEED	1	1	1	2
	2DC06020		GUIDE TURN A	1	1	1	3
◉	2DC06030		ROLLER FEED ASSY	1	1	1	2
	2DC06080		SHEET MPF PAD	3	3	3	3
◉	2DC07010		STOPPER PAPER	1	1	1	7
◉	2DC07020		POSITIONING FOLIO PAPER	1	1	1	7
◉	2DC11010		COVER ORIGINAL HOLDER(1/2)	1	1	1	9
◉	2DC11020		MAT ORIGINAL HOLDER	1	1	1	9
◉	2DC11031		UPPER HINGE	2	2	2	9
◉	2DC11040		LOWER HINGE	2	2	2	9
	2DC11050		TAPE ORIGINAL HOLDER	2	2	2	9
	2DC12010		UPPER FRAME SCANNER(1/2)	1	1	1	8
	2DC12020		LOWER FRAME SCANNER(1/4)	1	1	1	8
	2DC12040		SHAFT SCANNER	1	1	1	8
◉	2DC12050		CONTACT GLASS	1	1	1	8
◉	2DC12060		CONTACT GLASS DF	1	1	1	8
	2DC12110		MOUNT SCANNER MOTOR	1	1	1	8
◉	2DC12120		GEAR SCANNER 39/22	1	1	1	8
◉	2DC12130		GEAR SCANNER 45/18	1	1	1	8
	2DC12140		MOUNT TENSION PULLEY	1	1	1	8
◉	2DC12150		PULLEY TENSION	1	1	1	8
◉	2DC12160		MOTOR SCANNER	1	1	1	8
	2DC12170		SPRING TENSION	1	1	1	8
◉	2DC12180		BELT SCANNER	1	1	1	8
	2DC12190		RAIL SCANNER	1	1	1	8
◉	2DC12200		LAMP SCANNER	1	1	1	8
	2DC12210		STANDARD PLATE SHADING	1	1	1	8
◉	2DC12280		STOPPER 8	1	1	1	8
	2DC12300		GROUND PLATE SCANNER	1	1	1	8
	2DC12310		HOLDER FFC	1	1	1	8
	2DC12330		PLATE EARTH SCANNER A	1	1	1	8
	2DC12340		PLATE EARTH SCANNER B	1	1	1	8
	2DC12350		PLATE EARTH SCANNER C	1	1	1	8
	2DC12360		TAPE CONTACT GLASS A	2	2	2	8
	2DC12370		TAPE CONTACT GLASS B	2	2	2	8
	2DC12380		TAPE CONTACT GLASS C	1	1	1	8
	2DC12390		TAPE CONTACT GLASS D	4	4	4	8

SP	Part. No.	Alternative.	Description	Quantity			Fig. No.
				120V	230V	240V	
	2DC12400		TAPE FFC	2	2	2	8
	2DC12420		PLATE EARTH SCANNER D	1	1	1	8
	2DC12430		PLATE EARTH SCANNER E	1	1	1	8
	2DC12440		PLATE EARTH SCANNER F	1	1	1	8
	2DC12450		PLATE EARTH SCANNER G	1	1	1	8
	2DC12460		SEAL EARTH PLATE	2	2	2	8
	2DC13020		SHUTTER LSU	1	1	1	3
	2DC13030		MIRROR LSU	1	1	1	3
	2DC13040		SPRING FULL SENSOR	1	1	1	3
	2DC16030		PLATE EARTH BRUSH A	1	1	1	2
	2DC16040		SPRING TC R	1	1	1	2
	2DC16050		SPACER TRANSFER	1	1	1	3
	2DC20010		SPRING PRESS ROLLER	2	2	2	6
◉	2DC20020		HEATER 230 FIXING		1	1	6
◉	2DC20030		HEATER 120 FIXING	1			6
	2DC20040		FRAME FUSER LOW (1/2)	1	1	1	6
◉	2DC20050		THERMISTOR FUSER	1	1	1	6
	2DC20060		ROLLER PRESS	1	1	1	6
◉	2DC22010		MOTOR MAIN	1	1	1	4
	2DC22020		MOUNT MACHINE DRIVE	1	1	1	4
◉	2DC22030		GEAR 48/21	1	1	1	4
◉	2DC23010		FAN COOLING	1	1	1	2
◉	2DC25052		KEY PRINT	1	1	1	9
◉	2DC25060		KEY STOP	1	1	1	9
◉	2DC25070		KEY RESET	1	1	1	9
	2DC26070		SHIELD LSU	1	1	1	3
	2DC26080		GROUND PLATE SR	1	1	1	2
	2DC26100		CONTACT TRANSFER	1	1	1	2
	2DC26110		PLATE EARTH LSU	1	1	1	3
	2DC26120		TAPE FFC M/S	2	2	2	2
	2DC27010		CONN.CORD ASSY ENGINE-MAIN	1	1	1	2
	2DC27020		CONN.CORD ASSY ENGINE-SCANNER1	1	1	1	2
	2DC27030		CONN.CORD ASSY ENGINE-SCANNER2	1	1	1	2
	2DC27070		WIRE MAIN-LSU	1	1	1	3
	2DC27080		CONN.CORD ASSY SCANNER-MAIN2	1	1	1	8
	2DC27110		CONN.CORD ASSY ENGINE-MMOT	1	1	1	2
	2DC27140		WIRE ENGINE-LSU	1	1	1	3
	2DC27150		CORE FFC1	1	1	1	8
	2DC27160		CORE FFC2	2	2	2	2
◉	2DC27180		SWITCH PI	1	1	1	3

• Parts with "◉" indicates the spare parts.

SP	Part. No.	Alternative.	Description	Quantity			Fig. No.
				120V	230V	240V	
	2DC27410		AC CORD 120 ASSY	1			10
◉	2DC68090		TE SENSOR ASSY	1	1	1	3
◉	2DC68100		FULL SENSOR ASSY	1	1	1	3
◉	2DC93051		PARTS,FUSER UNIT(E)SP		1	1	6
◉	2DC93061		PARTS,FUSER UNIT(U)SP	1			6
◉	2DC93082		PARTS,DRIVE UNIT SP	1	1	1	4
◉	2DC93102		PARTS,MPF COVER SP	1	1	1	3
◉	2DC93111		PARTS,PLATEN COVER SP	1	1	1	9
◉	2DD01050		P.W.BOARD ASSY LCD	1	1	1	9
◉	2DD01060		P.W.BOARD ASSY BIAS	1	1	1	2
◉	2DD01080		P.W.BOARD ASSY DIMM	1	1	1	10
	2DD02010		PLATE EARTH CONTROLLER	1	1	1	2
	2DD02020		PLATE EARTH SW	1	1	1	2
	2DD02030		PLATE EARTH SHIELD	1	1	1	2
◉	2DD04010		COVER FRONT U	1		1	1
◉	2DD04020		LID TOP	1	1	1	1
◉	2DD04040		COVER FRONT E		1		1
◉	2DD25010		COVER OPERATION(1/2)	1	1	1	9
◉	2DD25020		SHEET OPERATION E	1	1	1	9
	2DD25040		KEY FUNCTION	1	1	1	9
	2DD25050		KEY DECISION	2	2	2	9
	2DD25060		KEY STATUS	1	1	1	9
	2DD25070		KEY ONE TOUCH	4	4	4	9
	2DD25080		KEY CONTROL	1	1	1	9
	2DD25090		KEY OPERATION 10	1	1	1	9
	2DD25130		RIGHT DUST SHIELD	1	1	1	9
	2DD25140		LEFT DUST SHIELD	1	1	1	9
	2DD25150		BARRIER LCD	1	1	1	9
	2DD25190		SHEET ONE TOUCH	5	5	5	9,10
	2DD26010		SHIELD CONTROLLER (1/3)	1	1	1	2
	2DD26020		LID CONTROLLER L	1	1	1	1
	2DD26040		HOLDER SPEAKER	1	1	1	1
	2DD26070		PLATE OPTION	1	1	1	2
	2DD26080		MOUNT SARCON MAIN	1	1	1	1
	2DD26090		PLATE SW REG	1			2
	2DD26100		SHEET MAIN PCB	2	2	2	1
	2DD27020		CONN.CORD ASSY ENG-BIASH	1	1	1	2
	2DD27030		CONN.CORD ASSY ENG-BIASY	1	1	1	2
	2DD27040		CONN.CORD ASSY SCN-MAIN1	1	1	1	8
	2DD27050		CONN.CORD ASSY SCN-PANEL	1	1	1	8

SP	Part. No.	Alternative.	Description	Quantity			Fig. No.
				120V	230V	240V	
	2DD27091		CONN.CORD ASSY SCN-CCD	1	1	1	8
	2DD27100		BINDING CORE	1	1	1	9
	2DD27110		GASKET SHIELD 3X4X10	1	1	1	8
	2DD27160		SHEET EMI	3	3	3	1,8
◉	2DD28030		PRINTED W.BOARD PS100	1			2
◉	2DD28040		PRINTED W.BOARD PS200		1	1	2
◉	2DD28070		TRANS ASSY	1	1	1	2
	2DD28100		SHEET RADIATOR A	2			2
	2DD28120		SHEET RADIATOR C	7	6	6	2
	2DD28140		SHEET SW REG E		1	1	2
	2DD28150		SHEET SW REG J	1			2
	2DD28160		SHEET SW REG J SUB	1			2
◉	2DD68030		P.W.B ASSY MAIN US(SP)	1			2
◉	2DD68040		P.W.BOARD ASSY ENGINE(SP)	1	1	1	2
◉	2DD68110		P.W.B ASSY MAIN EU(SP)		1		2
◉	2DD68120		P.W.B ASSY MAIN AS(SP)		1*	1*	2
◉	2DD68130		P.W.B ASSY MAIN AU(SP)			1	2
◉	2DD93010	302DD93010	PARTS, IMAGE SCANNER, SP	1	1	1	8
◉	2DD93020		PARTS,OPE PANEL (E),SP	1	1	1	9
	2FM02620		BUSH REGIST L	1	1	1	2
	2FM02630		BUSH REGIST R	1	1	1	2
	2FM02710		SPACER PAD	1	1	1	3
	2FM06010		GUIDE SIDE L	1	1	1	7
	2FM06020		GUIDE SIDE R	1	1	1	7
	2FM06030		SPRING BOTTOM MPF	1	1	1	3
◉	2FM14060		ROLLER TRANSFER C		1	1	2
◉	2FM14070		ROLLER TRANSFER I	1			2
	2FM68320		SEPARATOR PAPER ASSY	1	1	1	7
◉	2FM93081		CT-101(A4) CASSETTE ASSY		1	1	7
◉	2FM93093		PU-102 PROCESS UNIT	1	1	1	5
◉	2FM93101		CT-101(LTR) CASSETTE ASSY	1			7
◉	2FM93110		LK-101	1	1	1	3
	3DB27160		SPEAKER(PBF)	1	1	1	1
	3HK27050		CORE 8-16X10	1	1	1	9
	33927590		CORE 7-15X18	1	1	1	8
	B8023060		BINDING TAP-TITE B SCREW M3X6	2	2	2	3
	M2105970		CLAMP,CKN-10(KITAGAWA)	1	1	1	2
	M2108800		SPACER,KGPS-3.5S(KITAGAWA)	1	1	1	4
	Y87H5010		BATTERY,CR2032	1	1	1	2

• Parts with "◉" indicates the spare parts.

CLASSIFICATION OF THE SCREWS IN ILLUSTRATION

REF.	ITEM #	DESCRIPTION
ANG	B4073080	TRIPLE TAP-TITE B SCREW M3X8
ANJ	B8023120	BINDING TAP-TITE B SCREW M3X12
BHA	B3023060	BINDING TAP TITE S SCREW M3X6
BHE	B3023050	BINDING TAP-TITE S SCREW M3X5
BUD	B8204100	BINDING TAP-TITE B SCREW M4X10
BUL	B8023060	BINDING TAP-TITE B SCREW M3X6
EMQ	B3204060	BINDING TAP-TITE S SCREW M4X6
CAZ	B0903060	ROUND HEAD SCREW M3X6(NI)
E03	D1000300	STOP RING (E-3)
E05	D1000500	STOP RING (E-5)
HCM	B4213080	TRIPLE SCREW M3X8(UNICRO)
HCN	B8023080	BINDING TAP-TITE B SCREW M3X8
HCP	B4003060	TRIPLE SEREW M3X6
HCX	B8023100	BINDING TAP-TITE B SCREW M3X10
HDL	B4073050	TRIPLE TAP-TITE B SCREW M3X5

REF.	ITEM #	DESCRIPTION
HEB	B4094100	PEDESTALHEAD TAP-TITE B SCREW(CHROMATING)M4X10
HEC	B4090060	PEDESTALHEAD TAP-TIGHT B SCREW M3X6
KAK	E0020080	SPRING PIN 2X8
KDE	E1120100	SPRING PIN M2 X 10 SUS-DP XX
NAB	C1003000	NUT NM3
NAD	C1004000	NUT NM4
NCZ	B4213100	TRIPLE SCREW M3X10(UNICRO)
NGL	C2806130	POLY SLIDER M6.2X 13X.25T PA
RDD	D4000400	STOP RING CSTW-4
TGB	C4204000	CROWN WASHER TWM4
WPM	C2891100	POLY-SLIDER WASHER 4.1X10X0.3T
WPP	C2891080	POLY CUT WASHER 5.2X8X0.25T
XBE	C2894650	SHIM 4.1X0.25T
XCC	C2892950	SHIM 6.2X9.5X0.5T
XEJ	C3790080	WAVE WASHER SUS WW4.3X8X0.2T